PANDUIT WIRE BASKET BOLT-ON SPLICE

Part Numbers: PWBSPL**

©Panduit Corp. 2020

INSTALLATION INSTRUCTIONS

FS168

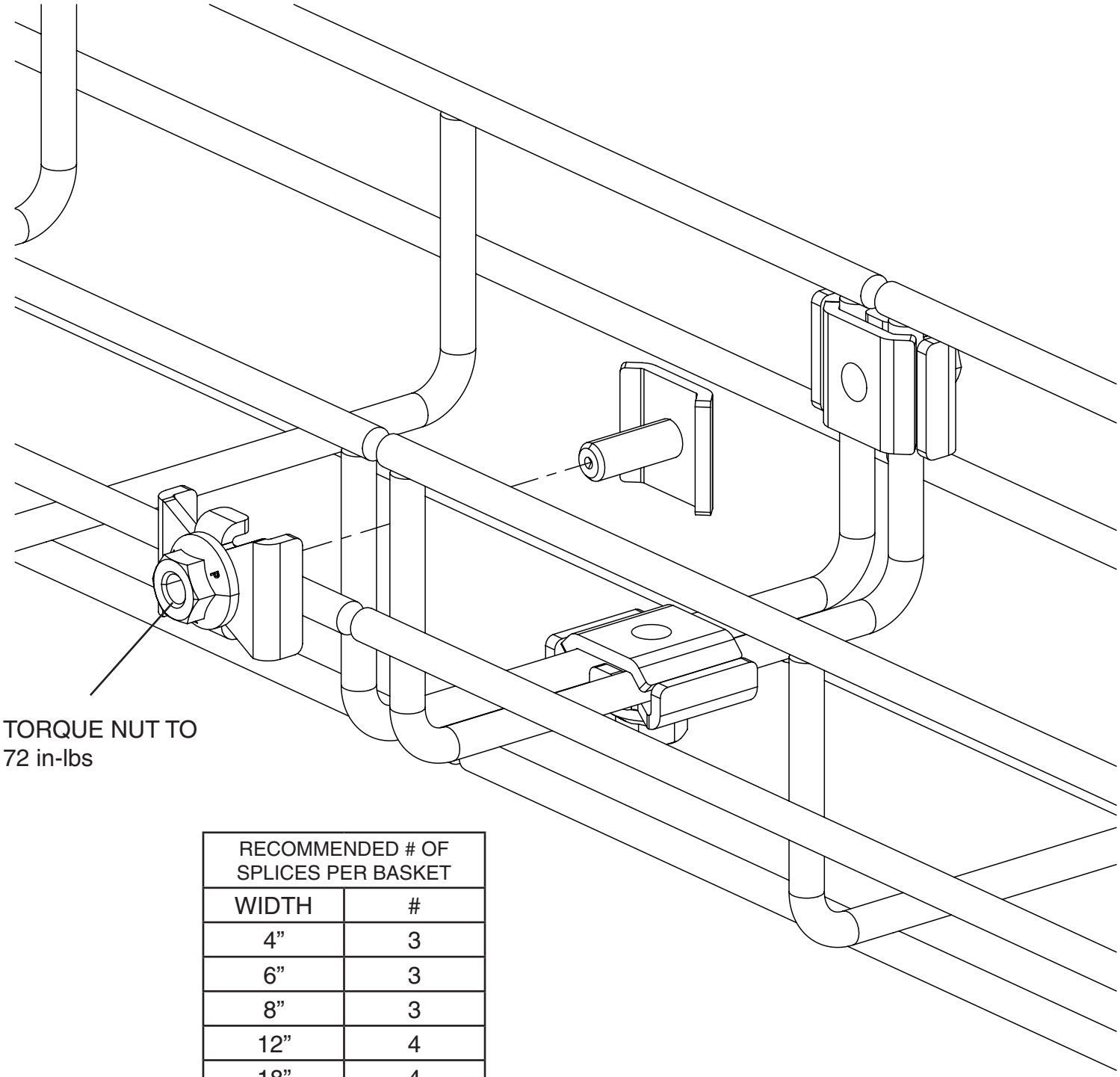

RECOMMENDED # OF SPLICES PER BASKET	
WIDTH	#
4”	3
6”	3
8”	3
12”	4
18”	4
24”	4

For Instructions in Local Languages and Technical Support:
http://www.panduit.com/resources/install_maintain.asp

www.panduit.com

E-mail:
techsupport@panduit.com
Phone:
866-405-6654